N Connector

The Best Wireless Solution!

N Male RG58, RG223, RG400, LMR200

P.N. : A04-M1101-01

Electrical Specification

Item	Specification
Frequency range	DC~9GHz
Impedance	50 Ω
V.S.W.R.	1.20
Insertion Loss	≤0.15dB at 9GHz
Contact Current	DC 3.5A Max
Working Voltage	1000V rms
RF Leakage	-90dBm min. from 2~3GHz
Insulation Resistance	5,000 MΩ Min
Connector Retention	500 Cycles Min
Interface	MIL-C-39012
Vibration	MIL-STD-202
Shock	MIL-STD-202
RoHS	Compliance

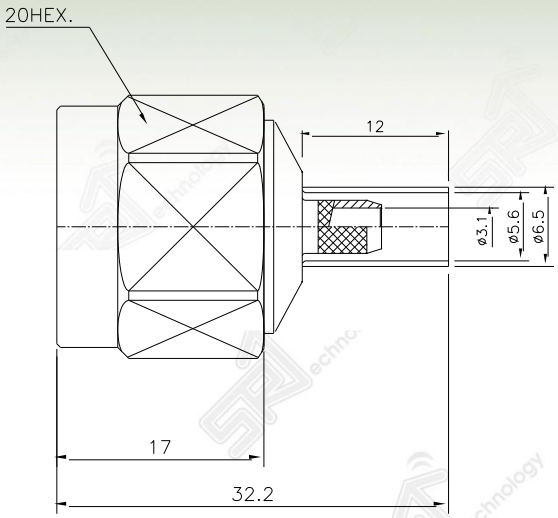

Material Specification

Item	Specification
Body & Coupling Nut	Brass / Nickel plating
Center contact	Brass / Gold plating
Insulator	PTFE
Ferrule	Brass / Nickel plating

Cable Cutting Length

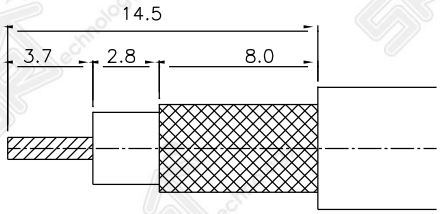

Recommended Stripping DIM'S

Recommended Crimp DIES : HEX5.5

Tel : (+82)2- 866 -9003
Fax : (+82)2-6280-9333
www.srtechnology.com
sale@srtechnology.com

This above specification can be changed without prior notification.