SMA Connector

The Best Wireless Solution!

SMA Female 4Hole Rec. (0*6.0)

P.N. : A01-F2002-29

Electrical Specification

Item	Specification
Frequency range	DC~18GHz
Impedance	50 Ω
Insulation Resistance	5,000 MΩ Min
RF Leakage	-60dBm Min., 2~3GHz
Interface	MIL-C-39012
Durability	500 Mating
Coupling Nut Torque	12 Ncm – 170 Ncm
Temperature	-65°C ~ +85°C
RoHS	Compliance

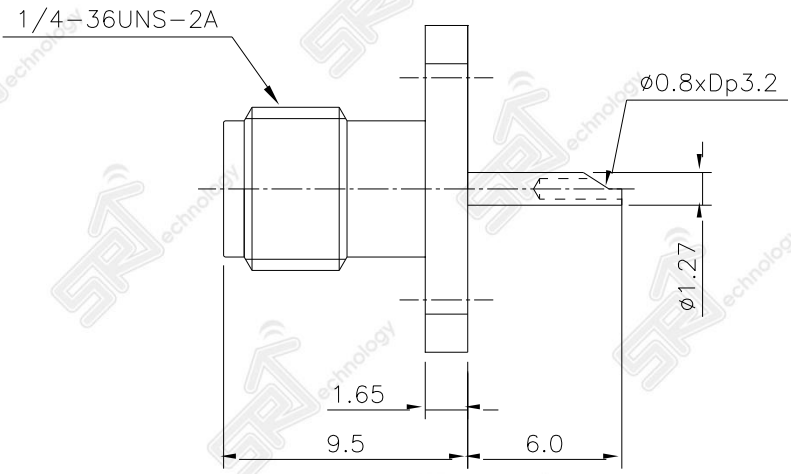

Material Specification

Item	Specification
Body & Coupling Nut	Brass / Gold plating
Center contact	Be-Cu/ Gold plating
Insulator	PTFE

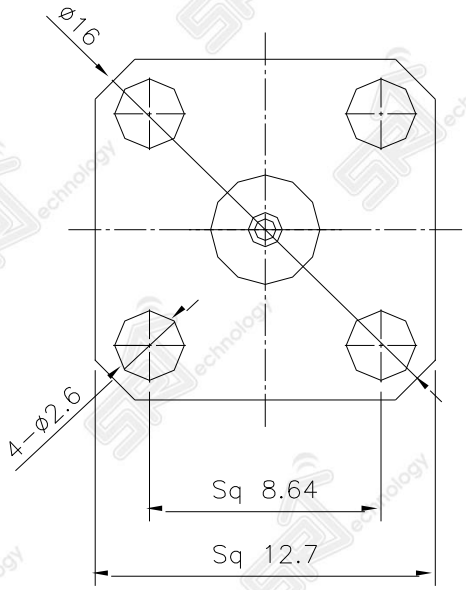

Tel : (+82)2- 866 -9003
Fax : (+82)2-6280-9333
www.srtechnology.com
sale@srtechnology.com

This above specification can be changed without prior notification.